Tagra | RF 2.4GHz | Battery Powered | LED Wall Plate | 4 Zones | CCT | Black (New)

BP4CCT-B / ITM000544



Datasheet

23-10-2026

Tagra | RF 2.4GHz | Battery Powered | LED Wall Plate | 4 Zones | CCT | Black (New)



Control Out	IP Rating	Warranty	Zones
RF 2.4GHz	IP20	5 Years	4 Zones

SKU: BP4CCT-B
ITM: ITM000544

Key Features:

- **Colour Control Type:** CCT Tunable White
- **Control Distance:** 30m
- **Body Colour:** Black
- **Dimensions (W x H x L):** 86 x 10 x 86mm

Mechanical Data			
Body Colour:	Black	**Recommended Enclosure Depth:**	10mm
Dimensions (LxWxH):	86 x 86 x 10mm		

Input Data			
Input Current:	8A	**Input Current Type:**	DC
Input Voltage:	3V		

Output Data	
No. of Control Channels:	3

Control Data			
Battery Type:	CR2032	**Colour Control Type:**	CCT Tunable White

Control Data			
Control Distance (barrier-free):	30m	**Control Signal Output:**	RF 2.4GHz
Dimming Range:	0% - 100%	**Max. No. of Receivers:**	30
No. of Scenes:	2	**No. of Zones:**	4

Environmental Data			
Body Material:	Glass	**Case Temperature Max. (tc):**	65°C
Ingress Protection (IP):	IP20	**Mounting Type:**	Surface Mounted
Operating Temperature:	-30°C - 55°C	**Storage Humidity:**	25% - 60%
Storage Temperature:	-20°C - 60°C	**Working Humidity:**	15% - 55%

Protection Data	
Electrical Safety Class:	III

Efficiency Data			
Rated Life:	50000 Hours	**Standby Power Max.:**	0.06W
Standby Power Typ.:	0.03W	**Startup Time:**	2 Secs

Dimension Drawing

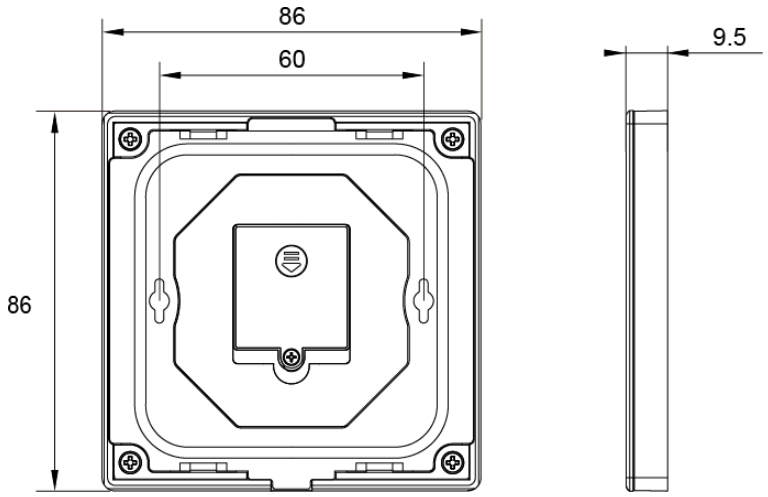

Packaging Data			
Packaging Height:	6.5mm	**Packaging Length:**	100mm
Packaging Width:	92mm	**Packaging Weight:**	145g

Disclaimer

Tagra Lighting have taken reasonable care to ensure that the information in this datasheet is accurate at time of publication however it should be noted that all specifications are subject to tolerance. Descriptive specifications such as colour are subjective. Tagra Lighting reserve the right to update specifications without notice. The information in the datasheet may only be relied on by customers of Tagra Lighting in accordance with applicable terms and conditions.

Tagra Lighting is a trading name of T.R Ventures Limited, a company incorporated in England with registered number 07757720. Our registered office is Unit 2, Southfield Industrial Estate, Trafford Park, M17 1SJ.

www.tagra-lighting.co.uk

support@tagra-lighting.co.uk